Cline Proportional Control Fuel System

Data & Instruction Sheet

The Cline Regulator is a totally **new concept** for a fuel delivery system for two and four-cycle engines. It delivers **consistent engine performance** throughout each flight regardless of the attitude of your plane or the amount of fuel in the tank.

Once the engine is warmed up and the needle valve set, it will stay adjusted through many flights. The **proportional control system** delivers the proper amount of fuel to the carburetor throughout a flight regardless of the amount of fuel in the tank.

Gravity or other forces have no effect on the ability of the engine to draw fuel and to run consistently flight after flight.

PCS Fuel System Details

- You can run two engines on one tank or one or two engines on two or more tanks.
- Tanks can be placed anywhere in the airplane.
- It is very light weight (20 grams), reliable and easy to install.
- 3/32 ID fuel tubing used throughout the system.
- It is a totally closed system making it possible to transport or work on the airplane without the fuel leaking out.
- Fuelling and de-fuelling is very easy with two separate lines, fill and overflow.
- No fuel pump to go bad or lose power during flight.
- The owner at a very minimal cost with readily available replacement parts can maintain a unit.
- A complete set of instructions and illustrations are included with each unit.
- A lot of time, testing, and experience have been put into the design and construction of this fuel system, thus it is one of the best performing and most trouble-free fuel system on the market today.

How it Works

The fuel tank is pressurized from 2 to 12 P.S.I. by a unique one-way check valve with the pressure from the crankcase of a two-cycle engine or from the exhaust of a four-cycle engine. This forces the fuel to the controller under that P.S.I. The controller is mounted either beside or directly behind the engine. The carburettor's fuel line suction acts on the diaphragm in the controller causing it to open the fuel valve in the controller. It is a demand controller; thus as the carburettor's fuel line suction increases, the amount of fuel the controller passes increases. When the engine is stopped, no fuel can enter the carburetor.

Installation Instructions

NOTE: Two-cycle engines must have a pressure tap on crankcase. (Put the pressure tap in the centre of the crankcase) Four-cycle engines must use muffler pressure. If no muffler, put tap in exhaust pipe close to cylinder. The controller requires 2 to 12 PSI to operate. The PSI tap is a 6/32 thread.

Due to the various possible installations, thee are no special mounts supplied or required. While installing the controller, keep in mind that it must be very close to the carburetor (3/4 to 1 inch).

You can put a piece of rubber around it to keep it from rubbing on the engine. You can support the fuel line to the controller. A good fuel filter should be placed in the fuel line as close to the controller as possible (on the inlet side). When using the system on engines with remote needle, the regulator must be between the needle valve and the carburetor fuel inlet.

The controller does not have to be soft mounted but it would be better if is **(IN NO CASE SHOULD IT BE ATTACHED DIRECTLY TO THE ENGINE).**

Now for the plumbing: Please review the installation diagrams (see end of this document) for the combination of engines and tanks you are using. Insert the special high frequency Check Valve in the pressure line as close to the Pressure Tap as possible. Make sure the check valve is oriented in the correct direction so as to trap pressure in the tank (small brass end [inlet] towards engine).

The tank can be placed anywhere in the airplane, but preferably **near or on the centre of gravity**.

There are two(2) Elbows, two(2) Tees, and two(2) Plugs) furnished with each controller.

The two elbows have a locking taper in them that fit the inlet and outlet of the controller so that the fuel lines can be angled in from any direction. Press the elbows on the controller firmly and put a thin drop of C/A about their base to secure them to the controller. You can move them by twisting them.

One tee should be placed in the line between the check valve and the vent on the fuel tank; the other tee should be placed in the fuel line between the filter and the fuel tank. (This line goes to the clunk.) Add a piece of tubing to each Tee and extend them outside the airframe in a convenient place to fuel and de-fuel the tank. Identify each line as to where it goes (fill or overflow) and close them with the plugs provided.

Now connect the controller outlet (marked OUT) to the carburetor.

Operating Instructions

Filling the Fuel Tank:
Remember, when refuelling the tank, you should always unplug the overflow first so as to relieve pressure in the tank.

Remove the plugs and pump fuel into the line you identified as fill until fuel comes out the line identified as overflow. No fuel can get into the engine at this time. When full, plug both lines.

Starting the Engine:
Choke the engine before starting to draw fuel into the carburetor. When the engine starts, you may have to momentarily keep it choked until the tank gets pressurized.

When adjusting the mixture, you will find that the needle will not be as sensitive as it was without the PCFS system installed. This is normal. You will find that the mixture will stay where you set it all through the run, from full to empty.

Transporting & Storing:
After running the engine, you should relieve the pressure in the tank and then plug the overflow for transporting or storing the airplane. Doing this will insure no fuel will drip out.

About Cline

Cline & Associates was founded by James Cline, a retired master engineer from Wright-Patterson Air Force Base. He has an extensive background in all types of engines.

Combining his vocation with his avocation, model airplanes, he came up with his brainchild of a fuel controller which would permit the fuel supply to remain stable at any attitude.

The Cline Fuel System (CFS) was developed, the company organized, and first offered for sale in 1993 and were widely used in the Tournament of Champions which were held in Las Vegas that year.

Today over 40,000 systems are in use in the United States as well as many other countries. They have been sold to RC Flyers in England, Australia, Japan, China, Mexico, Belgium, Canada, France, Germany, Costa Rica, Scotland, New Zealand and numerous other places.

In addition to being used in model airplane engines, some novel uses have cropped up for the Cline Fuel System. They are being used in helicopters, boats and, in at least one instance, in ink delivery systems. They have been tested by at universities for various other purposes.

For more information regarding this product please call Christian Traders on 02 6556 5192.

Troubleshooting

Problem 1a: Fuel goes through the controller when the tank is pressurised and the engine is not running.

Dirt under the needle valve in the controller. **TRY THIS FIRST**. Remove line from carburetor, connect it to your fuel pump and suck fuel through the system. This will cause the needle valve to open wide and wash small dirt particles out of the controller. If this does no solve the problem you will have to take the controller apart and clean it. Don't be afraid to take it apart, but be sure not to lose the spring under the lever.

Problem 1b: Gasket on the wrong side of the diaphragm.
The gasket goes on first on the plastic piece, then the diaphragm with the large aluminium side down toward the plastic

Problem 1c: The lever adjusted too high
Should be level with the bottom of the controller

Problem 2: No fuel will go through the controller when the tank is pressurised and the engine is choked.

Plugged fuel filter, pinched fuel line, foreign material on inlet of controller or no fuel in tank. Diaphragm in controller upside down. After sitting for a long time, the controller may become oil-clogged. See above under problem Number 1.

Problem 3: Needle valve cannot be opened enough to get a rich mixture.

Hole or leak in line from centre of controller to the carburetor. Not enough pressure in tank (2 to 12 PSI). The use of a pressure feed carburetor can cause the same problem. Change to a suction type carburetor. Diaphragm stiff or leaking – Recommend changing the diaphragm once a year.

Problem 4: Unable to build up pressure in tank (2 to 12 PSI)

Check valve is not holding or is in backwards. Remove and clean or replace. Pinched vent line or hole in vent line. Sometimes a NEW check valve sticks closed. Run a small blunt object through the check valve in the direction of flow. This will solve the problem.

Problem 5: Bubbles in the line

There are only three things that cause bubbles in the line

1. Controller is too far from the carburetor – relocate closer
2. There is not enough pressure – must be from 2 to 12 PSI
3. Controller is mounted too rigid – just let it hang on the line.

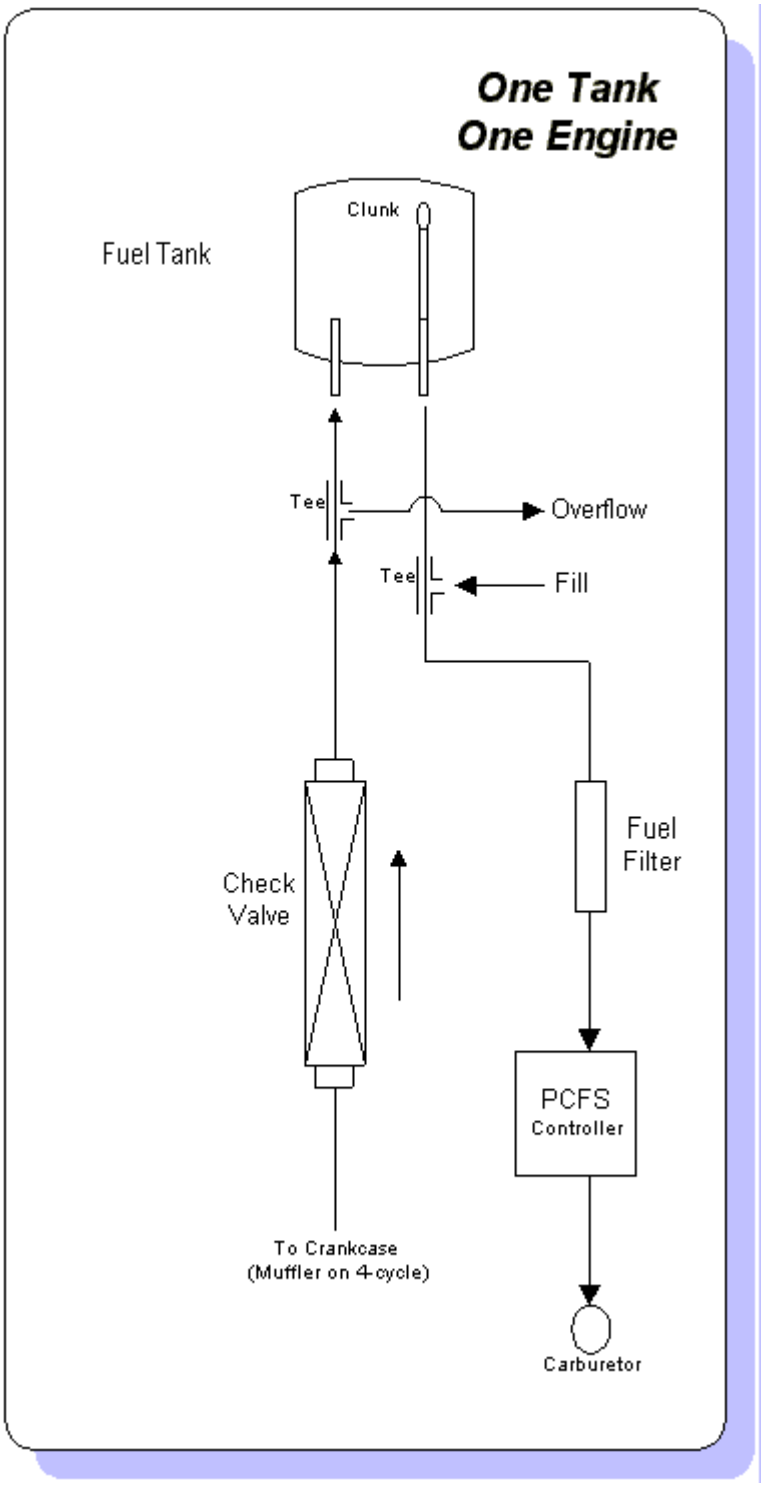
One Tank
One Engine
Fuel Tank
Clunk
Tee
Overflow
Tee
Fill
Check
Valve
Fuel
Filter
PCFS
Controller
To Crankcase
(Muffler on 4-cycle)
Carburetor

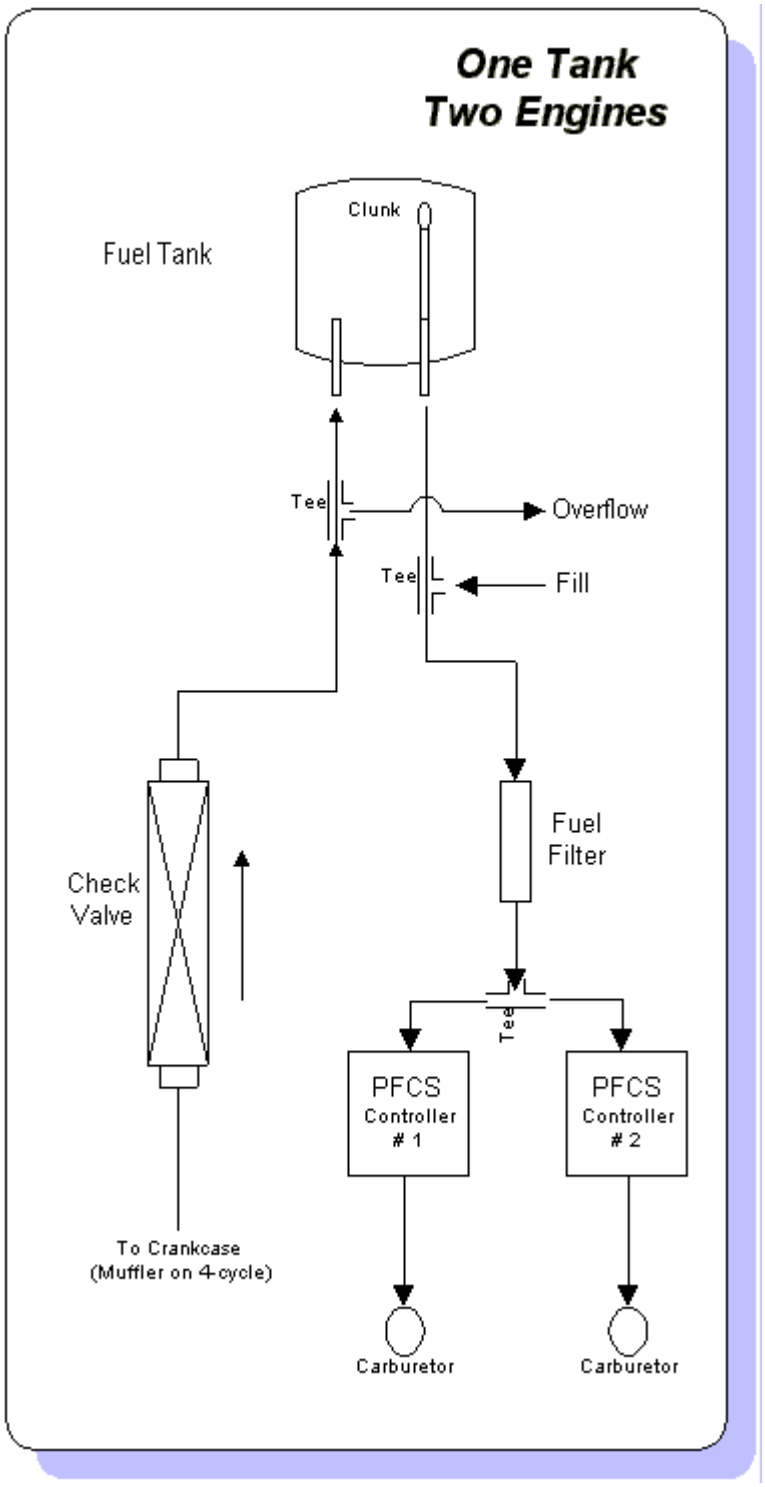
One Tank
Two Engines
Fuel Tank
Clunk
Tee
Overflow
Tee
Fill
Fuel
Filter
Check
Valve
Tee
PFCS
Controller
1
PFCS
Controller
2
To Crankcase
(Muffler on 4-cycle)
Carburetor
Carburetor

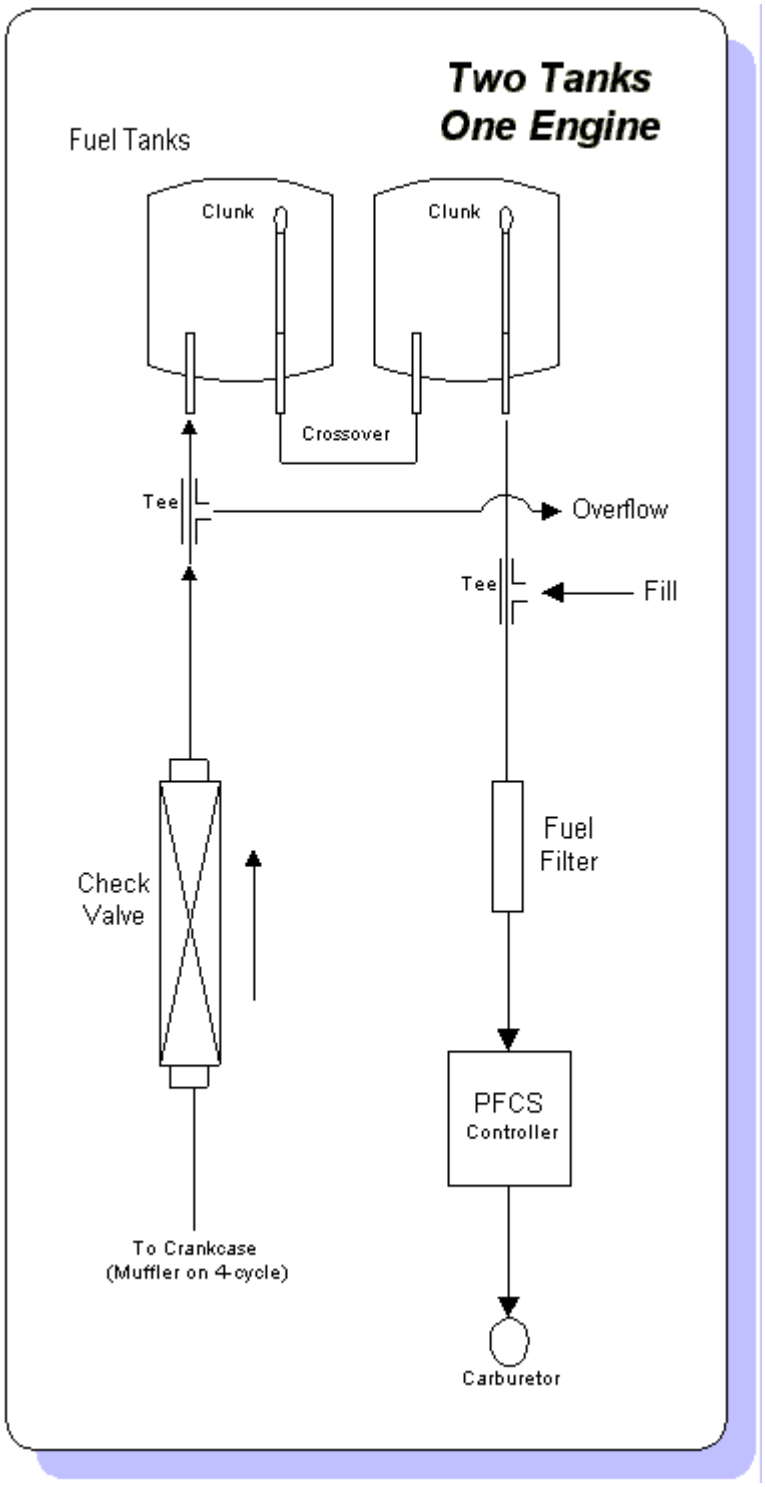
Two Tanks
One Engine
Fuel Tanks
Clunk
Clunk
Crossover
Tee
Overflow
Tee
Fill
Check
Valve
Fuel
Filter
PFCS
Controller
To Crankcase
(Muffler on 4-cycle)
Carburetor